DRAWING NUMBER
BL/D 7396 INST
USED ON

THIRD ANGLE PROJECTION

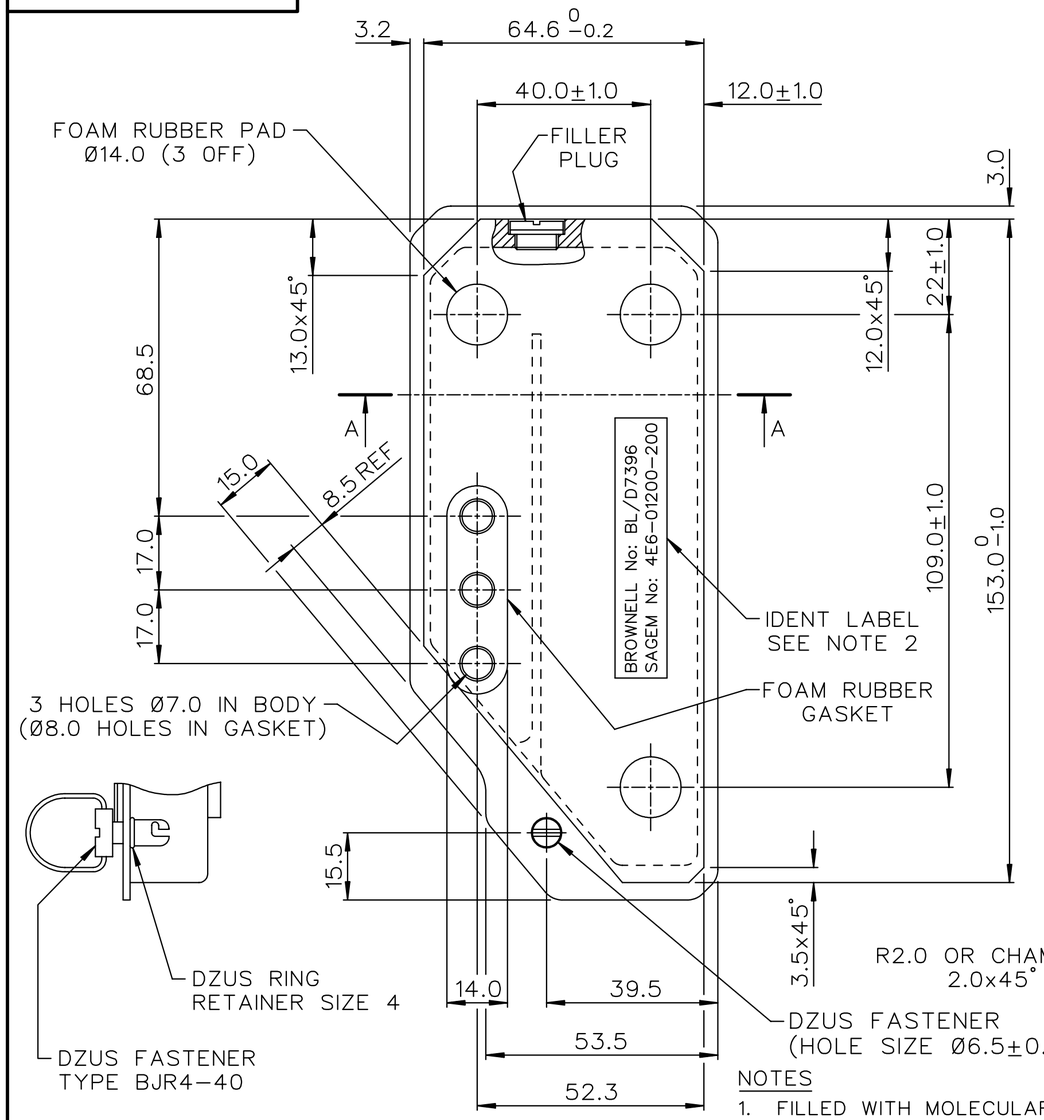

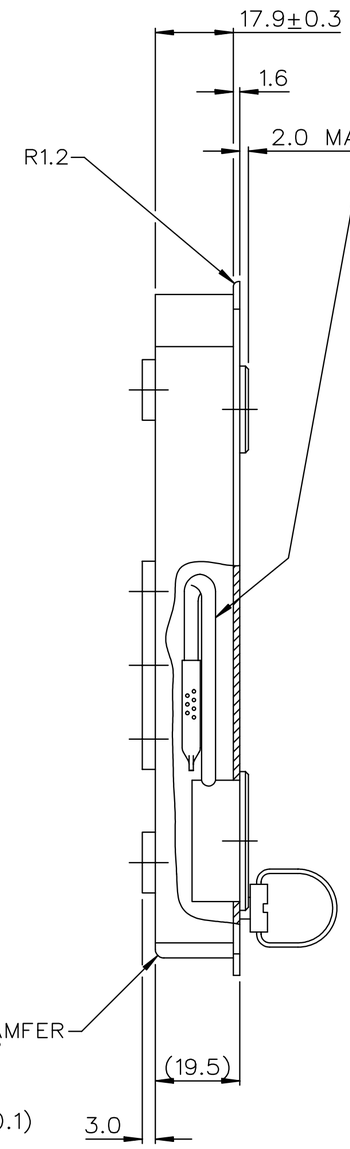

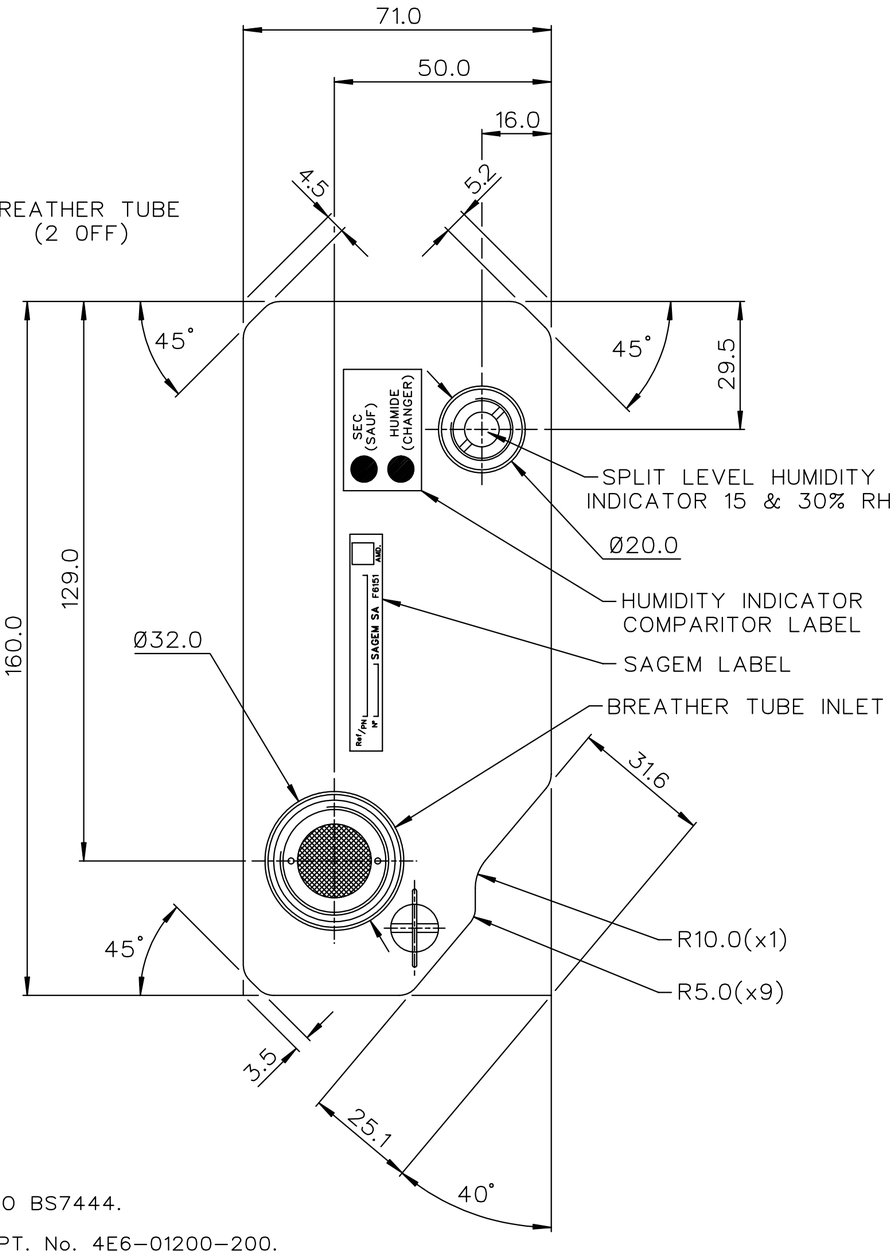

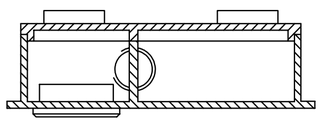

SECTION A – A

NOTES

1. FILLED WITH MOLECULAR SIEVES DESICCANT GRADE 4A TO BS7444.
2. IDENT LABEL TO BE MARKED WITH BROWNELL & SAGEM PT. No. 4E6–01200–200.
3. FILTRATION LEVEL: CLASS 1000.
4. OPERATION TEMPERATURE: –40 TO +70 °C. STORAGE TEMPERATURE: –55 TO +85 °C.
5. PACKAGED FOR A SHELF LIFE OF 5 YEARS.
6. PACKAGING LABEL TO STATE SAGEM PART No & ISSUE, DATE OF MANUFACTURE, USE BY DATE AND WORDING "NE PAS OUVRIR AVANT INSTALLATION".
7. PRESSURE DROP ACROSS DESICCATOR: LESS THAN 20mbar AT 0.1 LITRES/SEC.

MOD No	ISSUE	DATE	MOD No	ISSUE	DATE
			6023	F	5/3/03
			6020	E	26/2/03
			5079	D	5/6/97
			5031	C	12/3/97
			4982	B	25/11/96
				A	9/10/96

DRAWN	CHECKED	CERTIFIED
LJ		

MATERIAL	PROTECTIVE FINISH	TOLERANCES	CUSTOMER	CONTRACTORS DRAWING REF
ALUM ALLOY	ANODISED BLACK	±0.5	BROWNELL LTD. LONDON NW10	—
		DIMENSIONS IN ~~INS~~/mm	TITLE: DESICCANT CONTAINER DEHUMIDIFIER (BREATHER TUBE)	DRAWING NUMBER: BL/D 7396 INST
		SURFACE ROUGHNESS —		
		SCALE 1 : 1		

THIS DESIGN IS THE PROPERTY OF BROWNELL LTD AND MAY NOT BE COPIED OR REPRODUCED WITHOUT THEIR PRIOR WRITTEN PERMISSION