DRG No BL/D8437 INST
USED ON

THIRD ANGLE PROJECTION

REMOVE ALL SHARP EDGES UNLESS SPECIFIED

DO NOT SCALE – ASK

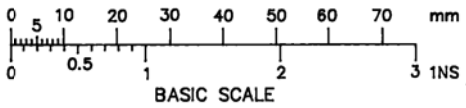

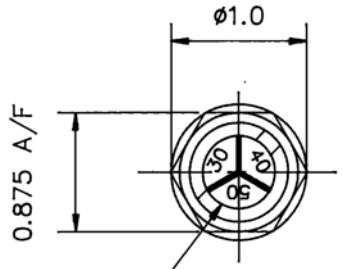

3 LEVEL HUMIDITY INDICATOR
30, 40 & 50% RH

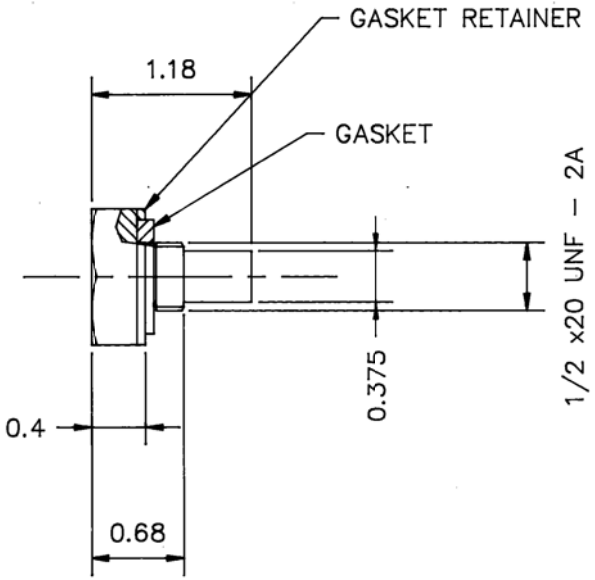

MAXIMUM INTERNAL PRESSURE 20 PSI
FILLED WITH NOMINAL 1 GRAM SILICA GEL

CHANGE	MOD No	ISSUE	DATE
	5517	3	17/9/99
	5514	2	10/9/99
		1	11/8/99

MATERIAL	PROTECTIVE FINISH	TOLERANCES	CUSTOMER	CUSTOMER'S REF	DRAWN	CHECKED
ALUMINIUM ALLOY	ANODISED TO DEF STAN 03–25 DYE BLACK	±0.010	BROWNELL Ltd. LONDON NW10		PGD	
EST. WT.		DIMENSIONS IN In/mm: in	TITLE: DIRECT FIRE SIGHT DESICCATOR	DRAWING NUMBER: BL/D8437 INST		
		SURFACE ROUGHNESS				
		SCALE (ORIGINAL): 1:1				