DRG No
BL/D8887/01–06 INST
USED ON

THIRD ANGLE PROJECTION

REMOVE ALL SHARP EDGES UNLESS SPECIFIED

DO NOT SCALE – ASK

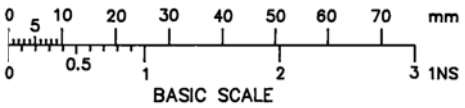

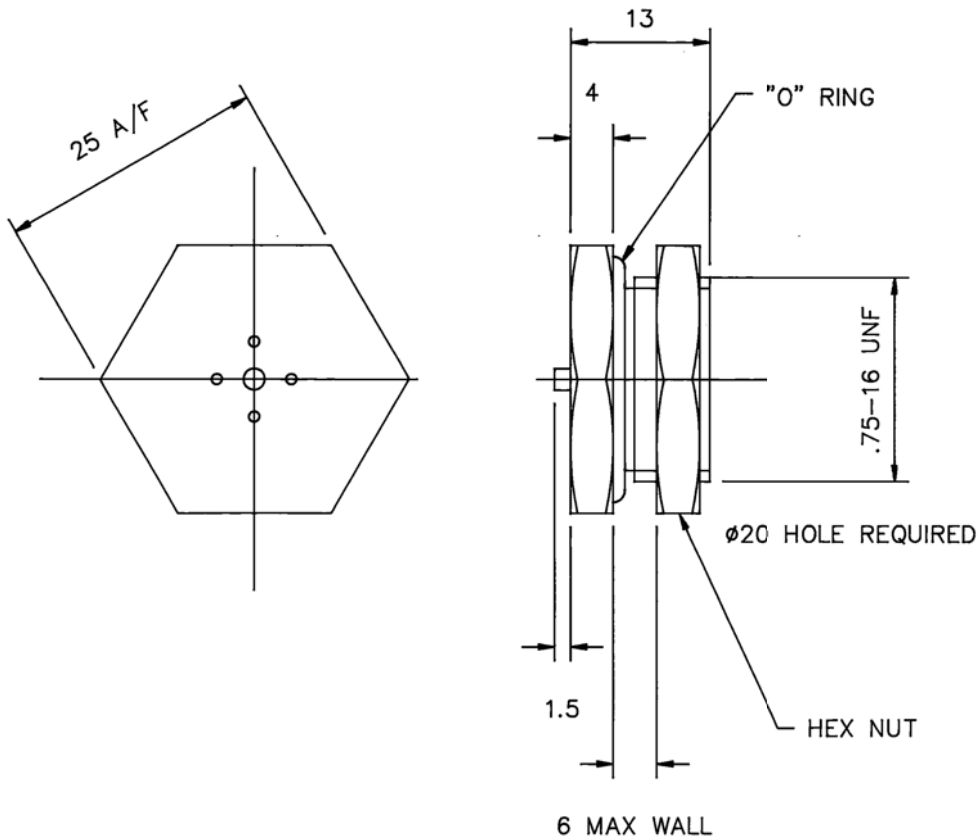

DRAWING NO	SEALED AT	FLOW RATE	@ PRESSURE
BL/D8887/01	0.5 PSID	0.5 SCFM	2.0 PSID
BL/D8887/02	1.0 PSID	0.5 SCFM	2 .5 PSID
BL/D8887/03	1.5 PSID	0.5 SCFM	3.0 PSID
BL/D8887/04	2.0 PSID	0.5 SCFM	3.5 PSID
BL/D8887/05	2.5 PSID	0.5 SCFM	4.5 PSID
BL/D8887/06	3.0PSID	0.5 SCFM	5.0 PSID

CHANGE	MOD No	ISSUE	DATE
		1	23/2/01

MATERIAL	PROTECTIVE FINISH	TOLERANCES	CONTRACTOR	CUSTOMER'S REF	DRAWN	CHECKED
ALUMINIUM ALLOY	ANODISED		BROWNELL Ltd. LONDON NW10		PGD	
EST. WT.		DIMENSIONS IN in/mm: mm	TITLE: DOUBLE DIFFERENTIAL RELIEF VALVE	DRAWING NUMBER: BL/D8887/01–06 INST		
		SURFACE ROUGHNESS				
		SCALE (ORIGINAL): 2:1				